Computer Science Engineering_Set2

Topic:- Mathematics_Set2

1)

If $A+B=\begin{bmatrix}1 & -1\\ 3 & 0\end{bmatrix}$ and $A-B=\begin{bmatrix}3 & 1\\ 1 & 4\end{bmatrix}$, then $AB=$

[Question ID = 13593]

1. $\begin{bmatrix}-2 & 2\\ 0 & -6\end{bmatrix}$
2. $\begin{bmatrix}-2 & -2\\ 2 & -4\end{bmatrix}$
3. $\begin{bmatrix}-2 & -2\\ 0 & -6\end{bmatrix}$
4. $\begin{bmatrix}1 & 0\\ 0 & 1\end{bmatrix}$

Correct Answer :-

- $\begin{bmatrix}-2 & -2\\ 0 & -6\end{bmatrix}$

2)

If $A=\begin{bmatrix}1\\ 0\\ 2\end{bmatrix}$; $B=\begin{bmatrix}1 & -1 & 0\\ 0 & 2 & 3\\ 4 & 0 & -1\end{bmatrix}$, then $A^TBA=$

[Question ID = 13594]

1. $[5]$

www.polytechadda.com

2. $[0]$

3. $\begin{bmatrix} 1 & -1 & 0 \\ 0 & 1 & 0 \\ 0 & 6 & -2 \end{bmatrix}$

4. $\begin{bmatrix} 1 & -1 & 0 \\ 0 & 2 & 3 \\ 4 & 0 & -1 \end{bmatrix}$

Correct Answer :-

- $[5]$

---

3) $\begin{vmatrix} x-y & p-q & a-b \\ y-z & q-r & b-c \\ z-x & r-p & c-a \end{vmatrix} =$

[Question ID = 13595]

1. 1
2. 2
3. xyz- pqr+ abc
4. 0

Correct Answer :-

- 0

---

4) The solution of the equation $\begin{vmatrix} 5-x & 4 & 3 \\ 1-3x & 7 & 6 \\ 1-x & 6 & 5 \end{vmatrix} = 0$ is

[Question ID = 13596]

1. $x=1$

2. $x=2$

3. $x=0$

www.polytechadda.com

4. $x=5$

Correct Answer :-

- $x=1$

5) The inverse of the matrix $A=\begin{bmatrix} a+ib & c+id \\ -c+id & a-ib \end{bmatrix}$,

if $a^2+b^2+c^2+d^2=1$ is

[Question ID = 13597]

1. $\begin{bmatrix} a-ib & c-id \\ c+id & a+ib \end{bmatrix}$

2. $\begin{bmatrix} a-ib & -c-id \\ c-id & a+ib \end{bmatrix}$

3. $\begin{bmatrix} c-id & a-ib \\ a+ib & c+id \end{bmatrix}$

4. $\begin{bmatrix} a-ib & c-id \\ -c-id & a+ib \end{bmatrix}$

Correct Answer :-

- $\begin{bmatrix} a-ib & -c-id \\ c-id & a+ib \end{bmatrix}$

6) $\dfrac{x^2}{x^2-3x+2}=$

[Question ID = 13598]

1. $\dfrac{1}{x-1}+\dfrac{2}{x-2}$

www.polytechadda.com

2. $1-\frac{1}{1-x}+\frac{3}{x-2}$

3. $1+\frac{1}{1-x}+\frac{4}{x-2}$

4. $1-\frac{1}{x-1}+\frac{2}{x-2}$

Correct Answer :-

- $1+\frac{1}{1-x}+\frac{4}{x-2}$

7) If $Sin\theta+Cosec\theta=2$, then the value of $Sin^3\theta+Cosec^3\theta=$

[Question ID = 13599]

1. 0
2. 1
3. 2
4. 8

Correct Answer :-

- 2

8) The value of $Sin^2\left(\frac{\pi}{8}+\frac{\theta}{2}\right)-Sin^2\left(\frac{\pi}{8}-\frac{\theta}{2}\right)=$

[Question ID = 13600]

1. $\frac{1}{\sqrt{2}}$

2. $\frac{1}{2}\sin\theta$

3. $\frac{1}{\sqrt{2}}\sin\theta$

www.polytechadda.com

4. $\sin(\frac{\theta}{2})$

Correct Answer :-

- $\frac{1}{\sqrt{2}}\sin\theta$

9) If x, y are in first quadrant, $\tan(x-y)=\frac{7}{24}$ and $\tan(x)=\frac{4}{3}$, then $x+y=$

[Question ID = 13601]

1. $\frac{3}{4}$
2. $\frac{\pi}{2}$
3. $\frac{\pi}{4}$
4. 1

Correct Answer :-

- $\frac{\pi}{2}$

10) If $A-B=\frac{3\pi}{4}$, then $(1-\tan A)(1+\tan B)=$

[Question ID = 13602]

1. 2
2. 1
3. 0
4. -1

Correct Answer :-

- 2

www.polytechadda.com

11) $\sec^2(\tan^{-1}3)+\operatorname{cosec}^2(\cot^{-1}3)=$

[Question ID = 13603]

1. 1
2. 10
3. 20
4. 30

Correct Answer :-

- 20

12) $3\operatorname{Cosec}x = 4\operatorname{Sin}x \Rightarrow x =$

[Question ID = 13604]

1. $n\pi \pm \frac{\pi}{2}; n \in z$
2. $n\pi \pm \frac{\pi}{3}; n \in z$
3. $2n\pi \pm \frac{\pi}{2}; n \in z$
4. $n\pi \mp \frac{\pi}{4}; n \in z$

Correct Answer :-

- $n\pi \pm \frac{\pi}{3}; n \in z$

13) If $x = \log_e\left(5+\sqrt{26}\right)$, then $\operatorname{Sinh}x =$

[Question ID = 13605]

1. 5
2. 1
3. 2

www.polytechadda.com

4. $\log_e 5$

Correct Answer :-

- 5

14)
If a, b and c are the lengths of the sides opposite to the angles A,B and C of a triangle ABC, then

$$(b-c)^2 Cos^2 \frac{A}{2} + (b+c)^2 Sin^2 \frac{A}{2} =$$

[Question ID = 13606]

1. a

2. b

3. b^2

4. a^2

Correct Answer :-

- a^2

15) If $z = 2 - i\sqrt{7}$, then $2z^2 - 8z + 22 =$

[Question ID = 13607]

1. 0
2. 1
3. 2
4. 4

Correct Answer :-

- 0

16)
The least positive integer n, satisfying $\left(\frac{1+i}{1-i}\right)^n = 1$ is

[Question ID = 13608]

1. 2

www.polytechadda.com

2. 1
3. 4
4. 8

Correct Answer :-

- 4

17) The distance between the parallel straight lines $3x+4y-3=0$ and $6x+8y-1=0$ is

[Question ID = 13609]

1. $\frac{1}{2}$
2. $\frac{1}{4}$
3. 1
4. $\sqrt{2}$

Correct Answer :-

- $\frac{1}{2}$

18) Angle between the lines $3x-5y-9=0$; $4x-y+7=0$ is

[Question ID = 13610]

1. $\theta=30^0$
2. $\theta=45^0$
3. $\theta=60^0$
4. $\theta=15^0$

Correct Answer :-

www.polytechadda.com

- $\theta = 45^0$

19)

Equation of the circle passing through (3,-4) and concentric with $x^2 + y^2 + 4x - 2y + 1 = 0$ is

[Question ID = 13611]

1. $x^2 + y^2 + 4x - 2y - 15 = 0$
2. $x^2 + y^2 + 4x - 2y - 30 = 0$
3. $x^2 + y^2 + x - 2y - 45 = 0$
4. $x^2 + y^2 + 4x - 2y - 45 = 0$

Correct Answer :-

- $x^2 + y^2 + 4x - 2y - 45 = 0$

20) The eccentricity of Ellipse $9x^2 + 16y^2 = 144$ is

[Question ID = 13612]

1. $\frac{7}{4}$
2. $\frac{\sqrt{7}}{4}$
3. $\frac{5}{4}$
4. $\frac{5}{3}$

Correct Answer :-

www.polytechadda.com

- $\frac{\sqrt{7}}{4}$

21) $\lim_{x \to 0} \frac{8^x - 2^x}{x} =$

[Question ID = 13613]

1. log 2
2. 0
3. log 4
4. 1

Correct Answer :-

- log 4

22) If $y = \cos^{-1}(4x^3 - 3x)$, then $\frac{dy}{dx} =$

[Question ID = 13614]

1. $\frac{-3}{\sqrt{1-x^2}}$
2. $\frac{4}{\sqrt{1-x^2}}$
3. $\frac{1}{\sqrt{1+x^2}}$
4. $\frac{-4}{3\sqrt{1-x^2}}$

Correct Answer :-

- $\frac{-3}{\sqrt{1-x^2}}$

23)

www.polytechadda.com

If $y=(\sin x)^{\log x}$, $then \frac{dy}{dx}=$

[Question ID = 13615]

1. $(\sin x)^{\log x}\{\tan x.\log x+\log(\sin x)\}$

2. $\log x\left\{\cot x.\sin x+\frac{1}{x}\log(\sin x)\right\}$

3. $(\sin x)^{\log x}\left\{\cot x.\log x+\frac{1}{x}\log(\sin x)\right\}$

4. $(\cos x)^{\log x}\left\{\tan x.\log x+\frac{1}{x}\log(\cos x)\right\}$

Correct Answer :-

- $(\sin x)^{\log x}\left\{\cot x.\log x+\frac{1}{x}\log(\sin x)\right\}$

---

24)

If $y=\log\left(x+\sqrt{1+x^2}\right)$, then $(1+x^2)\frac{d^2y}{dx^2}+x\frac{dy}{dx}=$

[Question ID = 13616]

1. 1

2. 0

3. x

4. $\frac{1}{\sqrt{1+x^2}}$

Correct Answer :-

- 0

www.polytechadda.com

25)

At $\theta = \frac{\pi}{4}$, the slope of the normal to the curve $x = a Cos^3\theta$; $y = a Sin^3\theta$ is

[Question ID = 13617]

1. -1
2. -2
3. 2
4. 1

Correct Answer :-

- 1

---

26)

If $x^y = e^{x-y}$, then $\frac{dy}{dx} =$

[Question ID = 13618]

1. $\frac{\log x}{(1+\log x)^2}$
2. $\frac{1}{(1+\log x)^2}$
3. $\frac{\log x}{1+\log x}$
4. $\frac{(\log x)^2}{(1+\log x)^2}$

Correct Answer :-

- $\frac{\log x}{(1+\log x)^2}$

---

27) Equation of the tangent to the curve $y = 5x^4$ at the point (1,5) is

[Question ID = 13619]

1. $y = 15(x-1)$

www.polytechadda.com

2. $y = 20x - 15$

3. $x = 15y - 20$

4. $y = 20(x - 1)$

Correct Answer :-

- $y = 20x - 15$

28) If $u = \sin^{-1}\left(\frac{x^2 + y^2}{x + y}\right)$, then $x\frac{\partial u}{\partial y} + y\frac{\partial u}{\partial y} =$

[Question ID = 13620]

1. cot u
2. tan u
3. 1
4. sin u

Correct Answer :-

- tan u

29) $\int \frac{a}{b + ce^x} dx =$

[Question ID = 13621]

1. $\frac{a}{b}\log\left(\frac{e^x}{b + ce^x}\right) + C$

2. $\frac{b}{a}\log\left(\frac{e^{-x}}{b + e^{-x}}\right) + C$

3. $\frac{a}{b}\log\left(\frac{1}{be^x + ce^{-x}}\right) + C$

4. $\frac{b}{a}e^{(b+ce^x)} + C$

www.polytechadda.com

Correct Answer :-

- $\frac{a}{b}\log\left(\frac{e^x}{b+ce^x}\right)+C$

30) $\int \frac{1}{(1+x^2)\tan^{-1}x}dx =$

[Question ID = 13622]

1. $\tan^{-1}x + C$

2. $\cot^{-1}x+C$

3. log(secx)tanx + C

4. log $(\tan^{-1}x)$ + C

Correct Answer :-

- log $(\tan^{-1}x)$ + C

31) $\int \frac{\cos(\log x^2)}{x^4}dx =$

[Question ID = 13623]

1. $\frac{1}{x^3}Cos\left[\log x^2+\tan^{-1}(\frac{3}{2})\right]+C$

2. $\frac{x^3}{\sqrt{13}}Cos\left[\log x^2+\cot^{-1}(\frac{2}{3})\right]+C$

3. $\frac{-1}{2x^3}Cos\left[\log x^2+\tan^{-1}(\frac{2}{3})\right]+C$

4. $\frac{1}{x^3\sqrt{13}}Cos\left[\log x^2+\cot^{-1}(\frac{3}{2})\right]+C$

Correct Answer :-

www.polytechadda.com

- $\frac{1}{x^3} Cos\left[\log x^2 + \tan^{-1}(\frac{3}{2})\right] + C$

---

32) $\int \frac{dx}{e^x - 1} =$

[Question ID = 13624]

1. $\log\left(\frac{1-e^x}{e^x}\right) + C$
2. $\log\left(e^x - 1\right) + C$
3. $\log\left(\frac{e^x - 1}{e^x}\right) + C$
4. $\log\left(\frac{e^{-x} - 1}{e^{-x}}\right) + C$

Correct Answer :-

- $\log\left(\frac{e^x - 1}{e^x}\right) + C$

---

33) $\int \frac{\sin^3 x + \cos^3 x}{\sin^2 x \cos^2 x} dx =$

[Question ID = 13625]

1. $\sec x + \cot x$
2. $\cos ecx - \cot x$
3. $\cos ecx + \tan x$
4. $\sec x - \cos ecx$

www.polytechadda.com

Correct Answer :-

- $\sec x - \cos ecx$

---

34) $\int_0^{\pi/4} \frac{e^{\tan x}}{\cos^2 x} dx$

[Question ID = 13626]

1. $e-1$
2. $e^{-1}-1$
3. $e^{-1}+1$
4. $e^{-2}-1$

Correct Answer :-

- $e-1$

---

35) $\int_0^{\pi} \sin^3 x(1-\cos x)^2 dx =$

[Question ID = 13627]

1. 5/3
2. 8/5
3. 1
4. 0

Correct Answer :-

- 8/5

---

36)

The volume generated by the revolution of the ellipse $\frac{x^2}{a^2}+\frac{y^2}{b^2}=1$ about its major axis is

[Question ID = 13628]

www.polytechadda.com

1. $4\pi ab^2$

2. $\frac{4}{3}\pi ab^2$

3. $\frac{4}{3}\pi a^2 b$

4. $\frac{8}{3}\pi a^2 b^2$

Correct Answer :-

- $\frac{4}{3}\pi ab^2$

37) The general solution of $x\frac{dy}{dx} = y[\log y - \log x + 1]$ is

[Question ID = 13629]

1. $y = Ce^x$

2. $y = Ce^y$

3. $y = xe^{cx}$

4. $x = Ce^{y/x}$

Correct Answer :-

- $y = xe^{cx}$

38) A and B are arbitrary constants ,the differential equation having

$xy = Ae^x + Be^{-x} + x^2$ as its general solution is

[Question ID = 13630]

www.polytechadda.com

1. $y'' + 2xy' - xy + x^2 = 0$

2. $xy'' + y' - xy - 2 = 0$

3. $xy'' + 2y' - 2xy + 3x^2 - 2 = 0$

4. $xy'' + 2y' - xy + x^2 - 2 = 0$

Correct Answer :-

- $xy'' + 2y' - xy + x^2 - 2 = 0$

---

39) .The solution of $\left(e^{-2\sqrt{x}} - y\right)\frac{dx}{dy} = \sqrt{x}$

[Question ID = 13631]

1. $y = e^{-2\sqrt{x}}\left(2\sqrt{x} + C\right)$

2. $y = e^{-2\sqrt{x}} + \sqrt{x} + C$

3. $y = e^{-2\sqrt{x}} + e^{\sqrt{x}}\sqrt{x} + C$

4. $y = e^{2\sqrt{x}} + \log x + C$

Correct Answer :-

- $y = e^{-2\sqrt{x}}\left(2\sqrt{x} + C\right)$

---

40) The solution of $Cosx\, dy = \left(Sinx - y\right)ydx$

[Question ID = 13632]

1. $y = \sec x \tan x + C$

2. $y^{-1}Co\sec x = \cot x + C$

www.polytechadda.com

3. $y^{-1}\sec x = \tan x + C$

4. $y = \log \sin x + C$

Correct Answer :-

- $y^{-1}\sec x = \tan x + C$

41) The solution of $\frac{d^2y}{dx^2} + 4\frac{dy}{dx} + 5y = 0$ satisfying $y(0) = 1$ *and* $y'(0) = 0$ is

[Question ID = 13634]

1. $y = e^{-2x}[\cos x + 2\sin x]$

2. $y = e^{-x}[2\cos x + \sin x]$

3. $y = e^{2x}[2\cos x + 3\sin x]$

4. $y = e^{x}[\cos x + 2\sin x]$

Correct Answer :-

- $y = e^{-2x}[\cos x + 2\sin x]$

42) $\frac{d^2y}{dx^2} - 5\frac{dy}{dx} + 6y = 2e^x$; with $y(0) = 1$; $y'(0) = 1$ satisfies

[Question ID = 13635]

1. $y = c_1e^{2x} + c_2e^{3x} + e^x$

2. $y = 2e^{2x} + 3e^{3x} + e^x$

3. $y = e^{2x} + 2e^{3x} + e^{-x}$

www.polytechadda.com

4. $y = e^x$

Correct Answer :-

- $y = e^x$

43) The solution of $(y\log x - 2)ydx = xdy$

[Question ID = 13636]

1. $y = x(\log x + C)$

2. $y = \frac{1}{x}\log x + x + C$

3. $\frac{1}{y} = x\log x + x + Cx$

4. $\frac{1}{y} = x^2\log x + x + C$

Correct Answer :-

- $\frac{1}{y} = x^2\log x + x + C$

44) Mean deviation about the median for the data 4,6,9,3,10,13,2 is [Question ID = 13641]

1. 4.31
2. 5.253
3. 3.285
4. 3.785

Correct Answer :-

- 3.285

45) If E_1, E_2 are any two events of a random experiment and P is a probability function then

[Question ID = 13642]

www.polytechadda.com

1. $P(E_1 \cap E_2) = P(E_1) + P(E_2) - P(E_1 \cap E_2)$

2. $P(E_1 \cup E_2) = P(E_1) + P(E_2) - P(E_1 \cap E_2)$

3. $P(E_1 \cap E_2) = P(E_1) + P(E_2) + P(E_1 \cup E_2)$

4. $P(E_1 \cup E_2) = P(E_1) + P(E_2) - P(E_1 \cup E_2)$

Correct Answer :-

- $P(E_1 \cup E_2) = P(E_1) + P(E_2) - P(E_1 \cap E_2)$

46) The solution of the initial value problem $\frac{d^2x}{dt^2} - 3\frac{dx}{dt} + 2x = 0;$

with $x(0) = 2; \quad x'(0) = 0$ is

[Question ID = 23975]

1. $x(t) = Ae^t + Be^{2t}$

2. $x(t) = 2e^t - 4e^{2t}$

3. $x(t) = 4e^t - 2e^{2t}$

4. $x(t) = e^t - 2e^{2t}$

Correct Answer :-

- $x(t) = 4e^t - 2e^{2t}$

47) The Laplace transform of $\left\{\frac{e^{-at}t^{n-1}}{(n-1)!}\right\} =$

[Question ID = 23976]

www.polytechadda.com

1. $\frac{e^{-at}}{(s+a)^n}$

2. $\frac{1}{(s+a)^n}$

3. $\frac{1}{(s-a)^n}$

4. $\frac{e^{at}}{(s-a)^n}$

Correct Answer :-

- $\frac{1}{(s+a)^n}$

48) The inverse Laplace transform of $\left\{\frac{1}{(8s-27)^{1/3}}\right\}=$

[Question ID = 23977]

1. $\frac{e^{(3/2)t}\ t^{-2/3}}{\Gamma\left(\frac{1}{3}\right)}$

2. $\frac{e^{(8/27)t}\ t^{-3/2}}{2\Gamma\left(\frac{1}{3}\right)}$

3. $\frac{e^{(2/3)t}\ t^{-3/2}}{2\Gamma\left(\frac{1}{3}\right)}$

4. $\frac{e^{(27/8)t}\ t^{-2/3}}{2\Gamma\left(\frac{1}{3}\right)}$

www.polytechadda.com

Correct Answer :-

- $\dfrac{e^{(27/8)t}\, t^{-2/3}}{2\Gamma\left(\frac{1}{3}\right)}$

---

49)

If $f(x)=\begin{cases}0 & ;-\pi\le x\le 0\\ \sin x\,; & 0\le x\le\pi\end{cases}$, $f(x+2\pi)=\mathrm{f(x)}$ and

$f(x)=\dfrac{a_0}{2}+\sum_{n=1}^{\infty}\left(a_n Cos\, nx+b_n Sin\, nx\right)$, then $a_0=$

[Question ID = 23978]

1. $\dfrac{1}{\pi}$
2. 1
3. 0
4. $\dfrac{2}{\pi}$

Correct Answer :-

- $\dfrac{2}{\pi}$

---

50)

The inverse Laplace transform of $\left\{\dfrac{s+3}{s^2+6s+25}\right\}=$

[Question ID = 23979]

1. $e^{-3t}\cos 4t$
2. $e^{3t}\sin 4t$

www.polytechadda.com

3. $e^{3t}\cos 4t$

4. $e^{-3t}\cos 3t$

Correct Answer :-

- $e^{-3t}\cos 4t$

Topic:- Physics_set2

1) The physical quantity having the dimension $[ML^2T^{-3}]$ is

[Question ID = 34198]

1. work
2. power
3. pressure
4. impulse

Correct Answer :-

- power

2) Force F is given by $F=at+bt^2$ where t is time. The dimensions of a and b are

[Question ID = 34199]

1. $[MLT^{-3}]$ and $[MLT^{-4}]$
2. $[MLT^{-1}]$ and $[MLT^{0}]$
3. $[MLT^{-3}]$ and $[MLT^{4}]$
4. $[MLT^{-4}]$ and $[MLT^{-1}]$

Correct Answer :-

- $[MLT^{-3}]$ and $[MLT^{-4}]$

3)

www.polytechadda.com

The magnitudes of two vectors are 4 and 5 and their scalar product is 10. Then the angle between the two vectors is [Question ID = 34200]

1. $30°$
2. $45°$
3. $60°$
4. $0°$

Correct Answer :-

- $60°$

---

4) If $\bar{a} + \bar{b} = \bar{c}$ and $\bar{a}^2 + \bar{b}^2 = \bar{c}^2$, then the angle between the vectors $\bar{a}$ and $\bar{b}$ is

[Question ID = 34201]

1. $0°$
2. $20°$
3. $45°$
4. $90°$

Correct Answer :-

- $90°$

---

5)

$\bar{a}$ and $\bar{b}$ are two vectors and θ is the angle between them. If $|\bar{a} \times \bar{b}| = \sqrt{3}\,(\bar{a} \cdot \bar{b})$, the value of θ is

[Question ID = 34202]

1. $30°$
2. $45°$

www.polytechadda.com

3. $60°$

4. $90°$

Correct Answer :-

- $30°$

---

6) A body under action of five forces can be in equilibrium [Question ID = 34203]

1. if all forces are equal
2. sum of resolved components along x-axis is zero
3. sum of resolved components along y-axis is zero
4. sum of resolved components along x-axis and y-axis, individually zero

Correct Answer :-

- sum of resolved components along x-axis and y-axis, individually zero

---

7) Two vibrating systems are said to be in resonance, if their [Question ID = 34204]

1. amplitudes are equal
2. temperatures are equal
3. frequencies are equal
4. phase values are equal

Correct Answer :-

- frequencies are equal

---

8)

A balloon is ascending at the rate of 9.8 ms^{-1} at a height of 39.2 m above the ground when a food packet is dropped from the balloon. The velocity with which the food packet reach the ground is

[Question ID = 34205]

1. $-9.8\ ms^{-1}$

2. $-58.8\ ms^{-1}$

3. $-4.9\ ms^{-1}$

4. $-29.4\ ms^{-1}$

Correct Answer :-

www.polytechadda.com

- $-29.4\ ms^{-1}$

9) The walls of hall built for music concerts should [Question ID = 34206]

1. amplify sound
2. reflect sound
3. transmit sound
4. absorb sound

Correct Answer :-

- absorb sound

10) When a star approaches the earth , the waves are shifted towards [Question ID = 34207]

1. green colour
2. yellow colour
3. blue end
4. red end

Correct Answer :-

- blue end

11)

A body of mass m is placed on a rough surface with coefficient of friction μ inclined at θ. If the mass is in equilibrium, then the value of θ is

[Question ID = 34208]

1. $Tan^{-1}\mu$
2. $Tan^{-1}(1/\mu)$
3. $Tan^{-1}(m/\mu)$
4. $Tan^{-1}(\mu/m)$

Correct Answer :-

- $Tan^{-1}\mu$

12)

www.polytechadda.com

If water falls from a dam into a turbine wheel 19.6 m below, then the velocity of water at the turbine is (given g=9.8 ms^{-2})

[Question ID = 34209]

1. 9.8 ms^{-1}
2. 19.6 ms^{-1}
3. 39.2 ms^{-1}
4. 98 ms^{-1}

Correct Answer :-

- 19.6 ms^{-1}

---

13) Two springs of spring constants 1000 N/m and 1500 N/m respectively are stretched with a same force. Their potential energies will be in the ratio of

[Question ID = 34210]

1. 2:3
2. 1:3
3. 3:2
4. 2:1

Correct Answer :-

- 3:2

---

14) The mass of a body at the centre of earth is

[Question ID = 34211]

1. less than that at the surface
2. remain constant
3. more than that at the surface
4. zero

Correct Answer :-

www.polytechadda.com

- remain constant

15)
The maximum velocity of a particle executing simple harmonic motion with an amplitude 7 mm is 4.4 ms^{-1}. The period of oscillation is

[Question ID = 34212]

1. 0.01 s
2. 0.1 s
3. 10 s
4. 100 s

Correct Answer :-
- 0.01 s

16) In a simple harmonic oscillator, at the mean position [Question ID = 34213]

1. both kinetic energy and potential energies are minimum
2. kinetic energy is maximum, potential energy is minimum
3. kinetic energy is minimum, potential energy is maximum
4. both kinetic energy and potential energies are maximum

Correct Answer :-
- kinetic energy is maximum, potential energy is minimum

17) The intensity of sound produced by thunder is $0.1 Wm^{-2}$. The intensity level in decibels is

[Question ID = 34214]

1. 110 dB
2. 100 dB
3. 90 dB
4. 140 dB

Correct Answer :-
- 110 dB

18) A classroom has dimensions 20 x 15 x 5 m^3. The reverberation time is 3.5 s. The average absorption coefficient is

[Question ID = 34215]

1. 0.05
2. 0.09
3. 0.03
4. 0.07

www.polytechadda.com

Correct Answer :-

- 0.07

19) Which of the following is not a characteristic of musical sound? [Question ID = 34216]

1. pitch
2. loudness
3. frequency
4. quality

Correct Answer :-

- frequency

20) In a simple harmonic motion, the particle is [Question ID = 34217]

1. always accelerated
2. alternately accelerated and retarded
3. always retarded
4. neither accelerated nor retarded

Correct Answer :-

- alternately accelerated and retarded

21)

100 g of water is heated from 30°C to 50°C. Ignoring the slight expansion of water, the change in its internal energy is (specific heat of water is 4200 J $kg^{-1}K^{-1}$)

[Question ID = 34218]

1. 4.2 kJ
2. 84 kJ
3. 2.1 kJ
4. 8.4 kJ

Correct Answer :-

- 8.4 kJ

22) Which of the following is correct [Question ID = 34219]

1. $(T_1/H_2) + (T_2/H_1) = 0$
2. $(H_1/T_1) = (H_2/T_2)$
3. $H_1 T_1 = H_2 T_2$
4. $H_1 T_1 + H_2 T_2 = 0$

Correct Answer :-

www.polytechadda.com

- $(H_1/T_1) = (H_2/T_2)$

23) An ideal gas in a cylinder is compressed adiabatically to one-third its original volume. During the process 50J of work is done on the gas by the compressing agent. The change in the internal energy of the gas in the process is [Question ID = 34220]

1. 50 J
2. 50/3 J
3. 150 J
4. 45 J

Correct Answer :-

- 50 J

24) The maximum kinetic energy of photoelectrons ejected from a potassium surface by ultraviolet light of wavelength 200 nm is (photoelectric threshold wavelength for potassium is 440 nm) [Question ID = 34221]

1. 2.82 eV
2. 4.40 eV
3. 6.20 eV
4. 3.38 eV

Correct Answer :-

- 3.38 eV

25)

For a light wave to undergo total internal reflection ('i_c' is critical angle, 'i' is incident angle)

[Question ID = 34222]

1. light moves from rarer to denser medium and $i > i_c$
2. light moves from denser to rarer medium and $i > i_c$
3. light moves from rarer to denser medium and $i < i_c$
4. light moves from denser to rarer medium and $i < i_c$

Correct Answer :-

- light moves from denser to rarer medium and $i > i_c$

Topic:- Chemistry_Set2

www.polytechadda.com

1) For an f-orbital, the values of 'm' are [Question ID = 23999]

1. -1, 0, +1
2. -3, -2, -1, 0, +1, +2, +3
3. 0, +1, +2, +3
4. -2, -1, 0, +1, +2

Correct Answer :-

- -3, -2, -1, 0, +1, +2, +3

2) Among LiCl, $BeCl_2$, BCl_3 and CCl_4, the covalent character follows the order:

[Question ID = 24000]

1. $LiCl > BeCl_2 > BCl_3 > CCl_4$
2. $LiCl < BeCl_2 < BCl_3 < CCl_4$
3. $LiCl > BeCl_2 < BCl_3 > CCl_4$
4. $LiCl < BeCl_2 < BCl_3 > CCl_4$

Correct Answer :-

- $LiCl < BeCl_2 < BCl_3 < CCl_4$

3) Lowest oxidation state in its compound is exhibited by

[Question ID = 24001]

1. N
2. O
3. C
4. F

Correct Answer :-

- F

4) Which of the following contains ionic, covalent and coordinate covalent bonds

[Question ID = 24002]

1. NH_4Cl
2. $K_3[Fe(CN)_6]$
3. $CuSO_4$
4. NH_4Cl, $CuSO_4$ and $K_3[Fe(CN)_6]$

www.polytechadda.com

Correct Answer :-

- NH_4Cl, $CuSO_4$ and $K_3[Fe(CN)_6]$

5) Molarity of 4% (W/V) solution of NaOH is [Question ID = 24003]

1. 0.1
2. 0.5
3. 0.001
4. 1

Correct Answer :-

- 1

6) The weight of $H_2C_2O_4.\ 2H_2O$ required to prepare 500mL of 0.2 N solution is

[Question ID = 24004]

1. 1.26 g
2. 6.3g
3. 1.575g
4. 3.15g

Correct Answer :-

- 6.3g

7) The conjugate base of hydrogen molecule is [Question ID = 24005]

1. Electron
2. Hydride ion
3. Proton
4. Hydroxide ion

Correct Answer :-

- Hydride ion

8) p^H of a solution is 1. It is diluted by $1X\ 10^3$ times. The p^H of the resulting solution will be

[Question ID = 24006]

1. 1
2. 3
3. 4
4. 5

Correct Answer :-

- 4

www.polytechadda.com

9) Which of the following is a basic flux

[Question ID = 24007]

1. $Na_2B_4O_7$

2. **CaO**

3. SiO_2

4. P_2O_5

Correct Answer :-

- **CaO**

---

10) Roasting of a metal oxide is carried out in which of the following furnaces

[Question ID = 24008]

1. Blast furnace

2. Reverberatory furnace

3. Both reverbaratory furnace and blast furnace

4. Muffle furnace

Correct Answer :-

- Reverberatory furnace

---

11) Three faradays of electricity was passed through an aqueous solution of Ferrous chloride. The weight of iron metal (at Wt = 56) deposited at the cathode in grams is [Question ID = 24009]

1. 56
2. 84
3. 112
4. 168

Correct Answer :-

- 84

---

12) Which one of the following could not be liberated from a suitable electrolyte by the passage of 0.25 Faraday of electricity through the electrolyte

[Question ID = 24010]

1. 0.25 mole of Ag

2. 16 gms of Cu

www.polytechadda.com

3. 2gms of O_2 (g)

4. 2.8 lit of H_2 at STP

Correct Answer :-

- 16 gms of Cu

---

13) . Given standard electrode potentials

$Fe^{3+} + 3e^- \text{ -----> } Fe \quad E^0 = -0.036\ V$

$Fe^{2+} + 2e^- \text{ -----> } Fe \quad E^0 = -0.440\ V$

The standard electrode potential E^0 for $Fe^{3+} + e^- \text{ -----> } Fe^{2+}$ is

[Question ID = 24011]

1. 0.476 V

2. -0.404 V

3. 0.40 V

4. 0.772 V

Correct Answer :-

- 0.772 V

14) Water acts as an excellent solvent, due to which property among the following:

[Question ID = 24012]

1. High viscosity

2. High Entholpy of formation

3. High dielectric constant

4. High density

Correct Answer :-

- High dielectric constant

---

15) A sample of water has $Mg(HCO_3)_2$=73 mg/L, $Ca(HCO_3)_2$ = 162 mg/L, $MgCl_2$ = 95 mg/L and $CaSO_4$ = 136 mg/L. Temporary hardness in ppm is

[Question ID = 24013]

1. 150

www.polytechadda.com

2. 350

3. 500

4. 200

Correct Answer :-

- 150

16) The process which removes all ionic, colloidal and high molecular weight organic matter in water is [Question ID = 24014]

1. Ion exchange process
2. zeolite process
3. Reverse osmosis
4. Lime soda process

Correct Answer :-

- Reverse osmosis

17) The monomer used in PVC preparation is [Question ID = 24015]

1. Ethene
2. Chloroethene
3. Dichloroethene
4. Tetrachloroethene

Correct Answer :-

- Chloroethene

18) The chemical used for accelerating Vulcanization is

[Question ID = 24016]

1. ZnO

2. SiO_2

3. Sulphur

4. Zinc sterate

Correct Answer :-

- Sulphur

19) Which one of the following type of forces are present in Nylon-6,6 [Question ID = 24017]

1. Electrostatic forces of attraction
2. Hydrogen bonding
3. Three dimensional network of bonds
4. Metallic bonding

www.polytechadda.com

Correct Answer :-

- Hydrogen bonding

20) Which one of the following is a primary pollutant

[Question ID = 24018]

1. **CO**
2. **PAN**
3. **Aldehyde**
4. H_2SO_4

Correct Answer :-

- **CO**

21) Ozone layer of upper atmosphere is being destroyed by

[Question ID = 24019]

1. Photochemical oxidants like O_2 and CO_2
2. **Chloro fluorocarbon**
3. **Smog**
4. SO_2

Correct Answer :-

- **Chloro fluorocarbon**

22) Eutrophication causes reduction in [Question ID = 24020]

1. Dissolved salts
2. Dissolved hydrogen
3. Dissolved oxygen
4. Dissolved solids

Correct Answer :-

- Dissolved oxygen

23) Which one of the chemical substance is maximum in natural gas [Question ID = 24021]

www.polytechadda.com

1. CH_4

2. C_2H_6

3. H_2

4. $CO+CO_2$

Correct Answer :-

- CH_4

24) Which one of the following metals could provide cathodic protection to iron [Question ID = 24022]

1. Cu and Ni
2. Zn and Cu
3. Al and Zn
4. Al, Zn and Ni

Correct Answer :-

- Al and Zn

25) Rusting of iron is catalysed by which of the following

[Question ID = 24023]

1. **Fe**

2. **Zn**

3. O_2

4. H^+

Correct Answer :-

- H^+

Topic:- CSE_Set2

1)

www.polytechadda.com

The logic realized by the following circuit at output F is

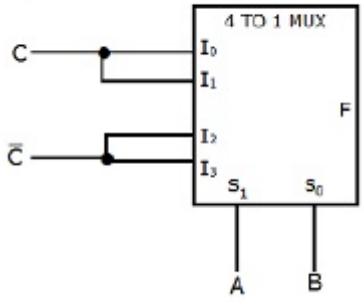

[Question ID = 13660]

1. B+C
2. A.C
3. A+C
4. B.C

Correct Answer :-

- A+C

2) We are given a set of n distinct elements and an unlabeled binary tree with n nodes. In how many ways can we populate the tree with the given set so that it becomes a binary search tree?
[Question ID = 13661]

1. 0
2. 1
3. n!
4. $(1/(n+1))2nC_n$

Correct Answer :-

- 1

3) A priority queue is implemented as a Max-Heap. Initially, it has 5 elements. The level-order traversal of the heap is: 10, 8, 5, 3, 2. Two new elements 1 and 7 are inserted into the heap in that order. The level-order traversal of the heap after the insertion of the elements is: _____

[Question ID = 13662]

1. 10, 8, 7, 3, 2, 1, 5
2. 10, 8, 7, 2, 3, 1, 5
3. 10, 8, 7, 1, 2, 3, 5
4. 10, 8, 7, 5, 3, 2, 1

www.polytechadda.com

Correct Answer :-

- 10, 8, 7, 3, 2, 1, 5

4) You have an array of n elements. Suppose you implement quicksort by always choosing the central element of the array as the pivot. Then the tightest upper bound for the worst case performance is _____ [Question ID = 13663]

1. $O(n^2)$
2. O(n Log n)
3. θ(n Log n)
4. $O(n^3)$

Correct Answer :-

- $O(n^2)$

5) Consider a hash table with 9 slots. The hash function is h(k) = k mod 9. The collisions are resolved by chaining. The following 9 keys are inserted in the order: 5, 28, 19, 15, 20, 33, 12, 17, 10. The maximum, minimum, and average chain lengths in the hash table, respectively, are _____

[Question ID = 13664]

1. 3, 0 and 1
2. 3, 3 and 3
3. 4, 0 and 1
4. 3, 0 and 2

Correct Answer :-

- 3, 0 and 1

6) Which of the following is a column in a table whose purpose is to uniquely identify the records from the same table? [Question ID = 13665]

1. Candidate key
2. Foreign key
3. Intelligent key
4. Primary key

www.polytechadda.com

Correct Answer :-

- Primary key

7) Which of the following adds a plain color to the background of a web page? [Question ID = 13666]

1. <body color="#FF0000">
2. <body color="344445">
3. <body bgcolor="#FF0000">
4. <body color="plain color">

Correct Answer :-

- <body bgcolor="#FF0000">

8) $[(A+A'B)(A+A'B')][(CD+C'D')+(C'D+CD')]$ can be minimized as

[Question ID = 10903]

1. B
2. A
3. 0
4. 1

Correct Answer :-

- A

9) When grouping cells within a K-map, the cells must be combined in groups of [Question ID = 10904]

1. 2
2. 4
3. 8
4. 1,2,4,8 etc

Correct Answer :-

- 1,2,4,8 etc

10) The simultaneous equations of boolean variables x, y, z and w are: x + y + z = 1, xy = 0, xz + w = 1 and xy + (zw)′ = 0 have the following solutions for x, y, z and w respectively. [Question ID = 10905]

1. 0100
2. 1101
3. 1011

www.polytechadda.com

4. 1000

Correct Answer :-

- 1011

11) The widely adapted combination circuit implementation method with maximum output functions and minimum requirement of ICs is [Question ID = 10907]

1. Multiplexer
2. Decoder
3. Encoder
4. Parity Generator

Correct Answer :-

- Decoder

12) A synchronous sequential circuit consists of two cascaded D flip flops with $D_0 = Q_1'$, $D_1 = Q_0$. The logic states of Q_0 and Q_1 immediately after 777 th clock pulse will be

[Question ID = 10908]

1. 1
2. 10
3. 100
4. 778

Correct Answer :-

- 10

13)

A synchronous counter consists of two cascaded JK flip flops with $J_0 = Q_1'$, $J_1 = Q_0$, $K_0 = K_1 = 1$. The circuit represents

[Question ID = 10909]

1. Mod- 3 counter
2. Mod-4 counter
3. Mod -5 counter
4. Mod – 7 counter

Correct Answer :-

- Mod- 3 counter

14)

www.polytechadda.com

The initial contents of the 4-bit serial – n-parallel-out right shift register as shown in the following figure is 0110, after three clock cycles are applied, the contents of the shift register will be

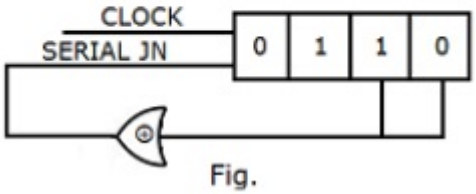

Fig.

[Question ID = 10910]

1. 0000
2. 1010
3. 0101
4. 1111

Correct Answer :-

- 1010

15) A 4- bit shift register in which the outputs of 3rd and 4th flip-flops are connected parallel through an ex-or gate back to the first flipflop input. If initially all flipflop outputs set to 1's , the circuit produces output sequence: [Question ID = 10911]

1. 1111 1111 0000 0000
2. 1111 0000 1111 0000
3. 1111 0001 0011 0101
4. 1010 1010 1010 1010

Correct Answer :-

- 1111 0001 0011 0101

16) A 16 K x 8 memory is to be expanded to 32 K x 8 . How many 16 K x 1 RAMS are required [Question ID = 10912]

1. 8
2. 16
3. 32
4. 128

Correct Answer :-

- 16

17) The access time (t_{acc}) of a memory IC is governed by the IC's:

[Question ID = 10913]

1. internal address buffer
2. internal address decoder
3. volatility
4. internal address decoder and volatility

www.polytechadda.com

Correct Answer :-

- internal address decoder

18) The semiconductor memories are organized as _____ dimension(s) of array of memory locations. [Question ID = 10914]

1. one
2. two
3. three
4. four

Correct Answer :-

- two

19) In 8086 which the following has the highest priority among all the external interrupts? [Question ID = 10915]

1. NMI
2. DIV O
3. TYPE 255
4. OVER FLOW

Correct Answer :-

- NMI

20) During the execution of instructions, if an instruction is executed, then next instruction is executed only when the data is read by [Question ID = 10916]

1. control unit
2. bus interface unit
3. execution unit
4. CPU

Correct Answer :-

- bus interface unit

21)

Number of the times the instruction sequence below will loop before coming out of loop is

```
      MOV   AL, 00h
A1:   INC   AL
      JNZ   A1
```

[Question ID = 10917]

1. 00
2. 01
3. 255
4. 256

Correct Answer :-

www.polytechadda.com

- 256

22) If the offset of the operand is stored in one of the index registers, then it is [Question ID = 10918]

1. based indexed addressing mode
2. relative based indexed addressing mode
3. indexed addressing mode
4. relative addressing mode

Correct Answer :-

- indexed addressing mode

23) The 80286 can be upward object code compatible with 8086 or 8088 when it is operated in [Question ID = 10919]

1. normal mode
2. real and virtual address mode
3. virtual address mode
4. real mode

Correct Answer :-

- real mode

24) Which of the following is not a scale factor of addressing modes of 80386? [Question ID = 10920]

1. 2
2. 4
3. 6
4. 8

Correct Answer :-

- 6

25)

Which of the following statements are true about coprocessor/accelerator?

i. Designed to provide fast, low cost implementation for complex arithmetic operations

ii. a processor with separate instruction set that is closely coupled to the CPU

iii. a processor whose instructions and registers are direct extensions of the CPU

[Question ID = 10921]

1. i, ii
2. ii, iii
3. i, iii
4. i, ii, iii

Correct Answer :-

www.polytechadda.com

- i, ii, iii

26)
Which of the following is not an advantage of Booth's algorithm?

i. Booth's algorithm handles both positive and negative multipliers uniformly

ii. Booth's algorithm achieves some efficiency in the number of additions required when the multiplier has few large blocks of 1's

iii. The speed of doing multiplication by Booth's algorithm is more than the normal algorithm of average.

[Question ID = 10922]

1. i, ii
2. iii
3. ii, iii
4. i, iii

Correct Answer :-

- iii

27) To preserve accuracy during floating point calculations one or more extra bits are temporarily attached to the right end of the mantissa. Such bits are called as _____ [Question ID = 10923]

1. Guard bits
2. Denormalized bits
3. Equalized bits
4. Normalized bits

Correct Answer :-

- Guard bits

28) Suppose the largest n-bit binary number requires 'd' digits in decimal representation. Which of the following relations between 'n' and 'd' is approximately correct? [Question ID = 10924]

1. $d = 2^n$
2. $n = 2^d$
3. $d < n \log_{10}2$
4. $d > n \log_{10}2$

Correct Answer :-

- $d > n \log_{10}2$

www.polytechadda.com

29) Which of the following statements is true about a bit-slice processor? [Question ID = 10925]

1. It can be cascaded to get any desired word length processor
2. Its speed of operation is independent of the word length configured
3. It does not contain any equivalent to a program counter in a normal microprocessor
4. It contains only the data path of a normal CPU

Correct Answer :-

- It can be cascaded to get any desired word length processor

30) The speed imbalance between memory access and CPU operation can be reduced by _____ [Question ID = 10926]

1. Cache memory
2. using virtual memory
3. reducing the size of memory
4. increasing the size of the memory

Correct Answer :-

- Cache memory

31) Microprogrammed control unit _____ [Question ID = 10927]

1. is faster than a hard wired control unit
2. facilitate easy implementation of new instructions
3. is useful when very small programs are to be run
4. usually refers to the control unit of a microprocessor

Correct Answer :-

- facilitate easy implementation of new instructions

32) In case of a direct mapping of cache, the mapping is expressed as _____ [Question ID = 10928]

1. Cache line number = (main memory block number) modulo (number of lines in the cache)
2. Cache line number = (number of lines in the cache) modulo (main memory block number)
3. number of lines in the cache = (cache line number) modulo (main memory block number)
4. number of lines in the cache = (main memory block number) modulo (cache line number)

Correct Answer :-

- Cache line number = (main memory block number) modulo (number of lines in the cache)

33) In the program controlled I/O method, the CPU stays in a program loop to _____ [Question ID = 10929]

1. indicate that it is ready for data transfer
2. indicate that it is not ready for data transfer
3. check the device for readiness and complete the data transfer
4. check for the readiness of other devices while data is being transferred

Correct Answer :-

www.polytechadda.com

- check the device for readiness and complete the data transfer

34) Start and stop bits do not contain information but are used in serial communication for _____ [Question ID = 10930]

1. Error detection
2. Error correction
3. Synchronization
4. Slowing down the communication

Correct Answer :-

- Synchronization

35) What will be the output of the following C code?

```
# include <stdio.h>
# define x 5+2
int main ( )
{
        int i;
        i = x * x* x;
        printf("%d", i);
        return 0;
}
```

[Question ID = 10931]

1. 343
2. 27
3. 132
4. 160

Correct Answer :-

- 27

36) What does the following function print?

```
int func (int i)
{
        if (i % 2) return 0;
        else return  1;
}
Int main( )
{
        int i=3;
        i = func(i);
        i= func(i);
        printf("%d", i);
}
```

www.polytechadda.com

[Question ID = 10932]

1. 3
2. 1
3. 0
4. 2

Correct Answer :-

- 1

37) What will be the value retuned by the following function, when it is called with a value 11?

```
Int recur(int num)
{
        if ( ( num/2) !=0 )
        return ( recur(num/2 ) * 10+num%2 );
        else return 1;
}
```

[Question ID = 10933]

1. Function does not return any value, because it goes into an infinite loop
2. 11
3. 1011
4. 1110

Correct Answer :-

- 1011

38) Which of the following statements mentioning the name of the array begins DOES NOT yield the base address?

i: When array name is used with the sizeof operator.

ii: When array name is operand of the & operator.

iii: When array name is passed to scanf() function.

iv: When array name is passed to printf() function.

[Question ID = 10934]

1. i
2. i and ii
3. ii
4. ii and iv

Correct Answer :-

- i and ii

www.polytechadda.com

39) What will be the output of the following code?

```
struct abc
{
        int a;
        int b;
} v[3], *p;
main ( )
{
        p=v;
        p-> a=3;
        p->b = p->a;
        printf("\n %d\t%d", v[0].a, v[0].b);
}
```

[Question ID = 10935]

1. 3 4

2. 4 3

3. Garbage Value

4. 3 3

Correct Answer :-

- 3 3

40) What is the missing statement in the following function which copies string x into string y?

```
void strcpy ( char *x, char *y)
{
        while( *y != '\0')
        ........................ ;/* missing statement */
        *x= '\0';
}
```

[Question ID = 10936]

1. x = y
2. *x ++=*y++
3. (*x)++=(*y)++
4. Error

Correct Answer :-

- *x ++=*y++

www.polytechadda.com

41) What is the output of the following code?

```
int main( )
{
        static int  num=8;
        printf("%d", num=num-2);
        if (num !=0)
        main( );
}
```

[Question ID = 10937]

1. 8 6 4 2
2. Infinite Loop
3. 6 4 2 0
4. Invalid because main function cannot call itself

Correct Answer :-

- 6 4 2 0

42) In the following C code,

```
main ( )
{
        FILE * f= fopen (filename, "r");
        fread(f);
        if (????)
        puts("end of file reached");
}
```

Which of the following can replace ???? in the above code to determine, if the end of a file has been reached?

[Question ID = 10938]

1. f = EOF
2. feof(f)
3. eof(f)
4. f = NULL

Correct Answer :-

- feof(f)

43) Consider the tree arcs of a BFS traversal from a source node W in an unweighted, connected, undirected graph. The tree T formed by the tree arcs is a data structure for computing _____ [Question ID = 10939]

1. the shortest path between every pair of vertices
2. the shortest path from W to every vertex in the graph
3. the shortest paths from W to only those nodes that are leaves of T
4. the longest path in the graph

www.polytechadda.com

Correct Answer :-

- the shortest path from W to every vertex in the graph

44) If we use merge sort to sort an array with n elements, what is the worst case time required for the sort? [Question ID = 10944]

1. O(1)
2. O(Log n)
3. O(n)
4. O(n Log n)

Correct Answer :-

- O(n Log n)

45) If the MAX_SIZE is the size of the array used in the implementation of circular queue, array index start with 0, front point to the first element in the queue, and rear point to the last element in the queue. Which of the following condition specify that circular queue is FULL?

[Question ID = 10945]

1. front = rear = -1

2. front = (rear+1) % MAX_SIZE

3. rear = front + 1

4. rear = (front + 1) % MAX_SIZE

Correct Answer :-

- front = (rear+1) % MAX_SIZE

46) If the sequence of operations –

push(1), push(2), pop, push(1), push(2), pop, pop, pop, push(2), pop

are performed on a stack, the sequence of popped out values are _____

[Question ID = 10946]

1. 2 2 1 2 2
2. 2 2 1 1 2
3. 2 1 2 2 1
4. 2 1 2 2 2

Correct Answer :-

- 2 2 1 1 2

47) In Internet protocol stack, when data is sent from device A to device B, the 5th layer to receive data at B is _____

www.polytechadda.com

[Question ID = 10947]

1. Application Layer

2. Transport Layer

3. Data Link Layer

4. Session Layer

Correct Answer :-

- Application Layer

48) Suppose two IPv6 nodes want to interoperate using IPv6 datagrams but are connected to each other by intervening IPv4 routers. The best solution here is _____ [Question ID = 10948]

1. Use dual-stack approach
2. Tunneling
3. No solution
4. Replace the system

Correct Answer :-

- Tunneling

49) In HTTP pipelining _____ [Question ID = 10949]

1. multiple HTTP requests are sent on a single TCP connection without waiting for the corresponding responses
2. multiple HTTP requests cannot be sent on a single TCP connection
3. multiple HTTP requests are sent in a queue on a single TCP connection
4. single HTTP request is addressed from a queue

Correct Answer :-

- multiple HTTP requests are sent on a single TCP connection without waiting for the corresponding responses

50) Which field helps to check rearrangement of the fragments? [Question ID = 10950]

1. offset
2. flag
3. TTL
4. identifier

Correct Answer :-

- offset

51)

Consider a token ring network with a length of 2 km having 10 stations including a monitoring station. The propagation speed of the signal is 2×10^8 m/s and the token transmission time is ignored. If each station is allowed to hold the token for 2 μsec, the minimum time for which the monitoring station should wait (in μsec) before assuming that the token is lost is _____.

www.polytechadda.com

[Question ID = 10951]

1. 28 to 30
2. 20 to 22
3. 0 to 2
4. 31 to 33

Correct Answer :-

- 28 to 30

52) If a class B network on the Internet has a subnet mask of 255.255.248.0, what is the maximum number of hosts per subnet? [Question ID = 10952]

1. 1022
2. 1023
3. 2046
4. 2048

Correct Answer :-

- 2046

53) For a particular code to be shareable, it should be _____ [Question ID = 10953]

1. serially executing code
2. reusable code
3. reentrant code
4. reducible code

Correct Answer :-

- reentrant code

54) Dijkstra's bankers algorithm in an operating system solves the problem of _____ [Question ID = 10954]

1. deadlock avoidance
2. deadlock detection
3. mutual exclusion
4. Page replacement

Correct Answer :-

- deadlock avoidance

55) At a particular time of computation the value of a counting semaphore is 5. Then 20 P operations and 18 V operations are performed on that semaphore. What is the final value of the semaphore? [Question ID = 10955]

1. 2
2. 3
3. -2
4. -3

Correct Answer :-

- 3

www.polytechadda.com

56) When the result of a computation depends on the speed and order of execution of processes involved, then it is said to be a _____ [Question ID = 10956]

1. deadlock
2. critical section
3. race condition
4. memory leak

Correct Answer :-

- race condition

57) During context switching which of the following need not be saved? [Question ID = 10957]

1. General purpose registers
2. Program counter
3. Stack pointer
4. Translation-look-aside buffer

Correct Answer :-

- Translation-look-aside buffer

58) The root directory of a file system should be placed _____ [Question ID = 10958]

1. At a fixed address in main memory
2. At a fixed location in the file system
3. At a fixed location on the system disk
4. Anywhere on the system disk

Correct Answer :-

- At a fixed location in the file system

59) Using a larger block size in a file system leads to _____ [Question ID = 10959]

1. Better disk throughput but poorer disk space utilization
2. Better disk throughput and better disk space utilization
3. Poorer disk throughput but better disk space utilization
4. Poorer disk throughput and poorer disk space utilization

Correct Answer :-

- Better disk throughput but poorer disk space utilization

60) In which one of the following page replacement algorithms, Belady's anomaly may occur? [Question ID = 10960]

1. Optimal
2. LRU
3. MFU
4. FIFO

Correct Answer :-

- FIFO

www.polytechadda.com

61) Consider a machine with 64MB physical memory and 32-bit virtual address space. If the page size is 4KB and one page table entry occupies 4-bytes, then what is the size of the page table? [Question ID = 10961]

1. 4MB
2. 8MB
3. 16MB
4. 2MB

Correct Answer :-

- 4MB

62) Where does swap space reside? [Question ID = 10962]

1. RAM
2. ROM
3. DISK
4. Cache memory

Correct Answer :-

- DISK

63) Sector interleaving in a disk is done by _____ [Question ID = 10963]

1. The disk manufacturer
2. Disk controller
3. The operating system
4. The user

Correct Answer :-

- The operating system

64) Which one of the following methods, for storing free block information, require additional space to be reserved? [Question ID = 10964]

1. Bit vector
2. Linked list
3. Grouping
4. Counting

Correct Answer :-

- Bit vector

65) Which of the following disk scheduling algorithm gives the best throughput? [Question ID = 10965]

1. FCFS
2. SCAN
3. LOOK
4. SSTF

Correct Answer :-

www.polytechadda.com

- SSTF

66) In UNIX traditional scheduling _____ [Question ID = 10966]

1. a CPU-bound process is given higher priority than an I/O bound process
2. an I/O-bound process is given higher priority than a CPU-bound process
3. Both CPU-bound and I/O-bound processes are given equal priority
4. It depends on the current load on the system

Correct Answer :-

- an I/O-bound process is given higher priority than a CPU-bound process

67) Which of the following clause is needed to sort the values of a particular column? [Question ID = 10967]

1. Having
2. Order by
3. Group by
4. Sort by

Correct Answer :-

- Order by

68) The column of a table in relational model is referred to as _____ [Question ID = 10968]

1. Tuple
2. Attribute
3. Entity
4. Degree

Correct Answer :-

- Attribute

69) CREATE TABLE is an example for _____ [Question ID = 10969]

1. DDL
2. DCL
3. DML
4. DTL

Correct Answer :-

- DDL

70) To modify the structure of a table the following command is used _____ [Question ID = 10970]

1. MODIFY
2. ALTER TABLE
3. UPDATE
4. CORRECT

www.polytechadda.com

Correct Answer :-

- ALTER TABLE

71) In which normal form every non-key attribute is non-transitively depending on key attribute? [Question ID = 10971]

1. First
2. second
3. Third
4. Fourth

Correct Answer :-

- Third

72) An index which contains at least one data entry for every search key value that appears in a record in the indexed file is _____ [Question ID = 10973]

1. Primary index
2. Secondary index
3. Dense index
4. Clustered index

Correct Answer :-

- Dense index

73) All locks obtained by a transaction are unlocked after the transaction _____ [Question ID = 10974]

1. Commit
2. Grant
3. Revoke
4. Compile

Correct Answer :-

- Commit

74)

Which of the following is true about the static member variable in C++?

i. It is initialized to zero when the first object of its class is created. Other initialization is also permitted.

ii. It is visible only within the class, but its lifetime is the entire program.

[Question ID = 10975]

1. i-True, ii-True
2. i-False, ii-True
3. i-True, ii-False
4. i-False, ii-False

Correct Answer :-

www.polytechadda.com

- i-False, ii-True

75) Which of the following statements is incorrect? [Question ID = 10976]

1. Friend keyword can be used in the class to allow access to another class
2. Friend keyword can be used for a function in the public section of a class
3. Friend keyword can be used for a function in the private section of a class
4. Friend keyword can be used on main()

Correct Answer :-

- Friend keyword can be used on main()

76) What will happen in this code?

```
int a = 100, b = 200;
int *p = &a, *q = &b;
p = q;
```

[Question ID = 10977]

1. b is assigned to a
2. p now points to b
3. a is assigned to b
4. q now points to a

Correct Answer :-

- p now points to b

77) What is the output of this program?

```
#include <iostream>
using namespace std;
int main( )
{
        char arr[20];
        int i;
        for(i = 0; i < 10; i++)
                *(arr + i) = 65 + i;
        *(arr + i) = '\0';
        cout << arr;
        return(0);
}
```

[Question ID = 10978]

1. ABCDEFGHIJ
2. AAAAAAAAAA
3. JJJJJJJJJJ
4. BBBBBBBBBB

Correct Answer :-

www.polytechadda.com

- ABCDEFGHIJ

78) Where does a cin stop its extraction of data? [Question ID = 10979]

1. by seeing (
2. when a blank space is encountered
3. when user stops typing
4. when keyboard buffer is full

Correct Answer :-

- when a blank space is encountered

79) ios : : trunc is used for? [Question ID = 10980]

1. if the file is opened for output and it already existed, its previous content is deleted and replaced by new one
2. if the file is opened for output and it already existed, no action is taken
3. if the file is opened for input and it already existed, the file is truncated
4. if the file is opened for input, it position file at the end of file

Correct Answer :-

- if the file is opened for output and it already existed, its previous content is deleted and replaced by new one

80) Which of the following advantages we lose by using multiple inheritance? [Question ID = 10981]

1. static binding
2. Polymorphism
3. dynamic bringing
4. virtulization

Correct Answer :-

- dynamic bringing

81) Which exception is thrown by dynamic_cast? [Question ID = 10982]

1. bad_cast
2. bad_typeid
3. bad_exception
4. bad_alloc

Correct Answer :-

- bad_cast

82)

www.polytechadda.com

What is the output of this program?

```
#include<iostream>
#include <fstream>
using namespace std;
int main ()
{
        ofstream outfile ("test.txt");
        for (int n = 0; n < 100; n++)
        {
                outfile << n;
                outfile.flush();
        }
        cout << "Done";
        outfile.close();
        return 0;
}
```

[Question ID = 10983]

1. Done
2. Error
3. Runtime error
4. File not found exception

Correct Answer :-

- Done

83) What must be specified when we construct an object of class ostream? [Question ID = 10984]

1. stream
2. streambuf
3. memory
4. fstream

Correct Answer :-

- streambuf

84) Which one among the following is a legal declaration and initialization of an array in Java language?

[Question ID = 10985]

1. int a[] = {"1", "2", "3", "4"};

2. int a[] = {1, 2, 3, 4};

3. int a[] = (1, 2, 3, 4);

4. int a[][] = {1, 2, 3, 4};

www.polytechadda.com

Correct Answer :-

- int a[] = {1, 2, 3, 4};

85) Applet method getParameter(String paramName), in Java language is used for _____ [Question ID = 10986]

1. Getting the parameter value as a String
2. Getting the environment variable
3. Getting the program argument
4. Getting the parameter value as a number

Correct Answer :-

- Getting the parameter value as a String

86) Synchronized method of a class, in Java language, makes _____ [Question ID = 10987]

1. the system is synchronized with other systems
2. the method syncronized with other methods
3. the method work as an entry method of a monitor
4. the class is synchronized with the program

Correct Answer :-

- the method work as an entry method of a monitor

87) Member method isAlive() of Thread class of Java language, is used for _____ [Question ID = 10988]

1. testing whether the process is alive
2. testing whether the the thread is currently running
3. testing for whether the process is currently running
4. testing whether the thread is active

Correct Answer :-

- testing whether the thread is active

88) The keyword 'throws' is used for _____ [Question ID = 10989]

1. throwing an exception
2. throwing an object
3. indicates that the specified exceptions may be raised in the corresponding method
4. raising a list of exceptions explicitly

Correct Answer :-

- indicates that the specified exceptions may be raised in the corresponding method

89) ArrayIndexOutOfBounds exception in Java language is raised when _____ [Question ID = 10990]

1. an index outside the limits of array is used
2. a non-integer is used as an index
3. a non-array is accessed using array indexing

www.polytechadda.com

4. an array is accessed using zero index value

Correct Answer :-

- an index outside the limits of array is used

90) Which one of the following statements, in the context of Java language, is wrong? [Question ID = 10991]

1. A member with no access modifier can be accessed in a non-subclass in the same package
2. A member with protected modifier cannot be accessed in a subclass of a different package
3. A member with protected modifier can be accessed in a non-subclass of the same package
4. A member with private modifier can be accessed only in its own class

Correct Answer :-

- A member with protected modifier cannot be accessed in a subclass of a different package

91) A final method in Java language indicates that _____ [Question ID = 10992]

1. it is a last method being executed
2. it is a last handler for an exception
3. it is a constant method
4. it cannot be overloaded

Correct Answer :-

- it cannot be overloaded

92) The '>>>' operator in Java language is used for _____ [Question ID = 10993]

1. Rotating right signed
2. Shifting right signed
3. Rotating right unsigned
4. Shifting right unsigned

Correct Answer :-

- Shifting right unsigned

93) Which one of the following statements is true in Java language? [Question ID = 10994]

1. Simple variables can be passed either by value or by reference
2. Objects can be passed either by value or by reference
3. Objects can be passed only by reference
4. Simple variables can be passed only by reference

Correct Answer :-

- Objects can be passed only by reference

94) Which of the following is not a basic HTML document structure? [Question ID = 10995]

1. Title
2. Body
3. Head
4. Footer

www.polytechadda.com

Correct Answer :-

- Footer

95) Which is not considered a JavaScript operator? [Question ID = 10996]

1. New
2. This
3. Delete
4. Typeof

Correct Answer :-

- This

96) Which of the following attributes of the font tag is used to choose the type of font in HTML? [Question ID = 10998]

1. Type
2. Text-Type
3. Face
4. Font-Type

Correct Answer :-

- Face

97) The _____filter applies transparency effects dynamically, without using a graphics editor to hard-code transparency into the image. [Question ID = 10999]

1. Flip
2. Blur
3. Shadow
4. Chroma

Correct Answer :-

- Chroma

98) What is the result of the following command: $a = 1 + "apple"; ?

[Question ID = 11000]

1. $a is assigned the value "1apple."
2. $a is assigned the value 1
3. $a is assigned the value "apple."
4. it is an error

Correct Answer :-

- $a is assigned the value 1

99) Which of the following is not a method of the window object? [Question ID = 11001]

1. Alert()
2. Move()

www.polytechadda.com

3. Conform()
4. Close()

Correct Answer :-

- Move()

100) What is the output of the following PHP code?

```
$a=array(2,3,4,1); $x=$a[3]; $y=$a[2]; print "y=$y x=$x";
```

[Question ID = 11002]

1. y=4 x=1
2. y=2 x=4
3. y= 1 x=4
4. y=4 x=2

Correct Answer :-

- y=4 x=1

www.polytechadda.com